Optotune +5 to +10 diopters, NIR, Optotune Industrial Focus Tunable Lens | EL-10-30-CI-NIR-LD

See More by Optotune

+5 to +10 diopters, VIS, Optotune Industrial Focus-Tunable Lens

Stock **#88-938** CLEARANCE **2 In Stock**

- 1 + **S$455**.48 ~~S$910.96~~

ADD TO CART

Volume Pricing	
Qty 1+	~~S$910.96~~ **S$455.48** each
Need More?	Request Quote

Product Downloads

SPECIFICATIONS

General

Type:	Specialty Lens
Driver:	

#88-940

Lifecycles:
>1,000,000,000

Model Number:
EL-10-30-Ci-NIR-LD

Response Time (ms):
2.5 (10%-90% step)

Physical & Mechanical Properties

Clear Aperture CA (mm):
10.00

Dimensions (mm):
48.0 x 30.5

Thickness (mm):
20.60

Optical Properties

Substrate:
Low Dispersion Polymer

Coating:
BBAR (700-1100nm)

Wavelength Range (nm):
700 - 1100

Abbe Number (v_d):
100.00

Focus Range (mm):
+5 to +10 diopter
+100 to +200mm

Index of Refraction (n_d):
1.3

Transmitted Wavefront Error, RMS:
Vertical: 0.1λ @ 795nm
Horizontal: 0.17λ @ 795nm

Damage Threshold, By Design:
10 kW/cm^2 @ 1064nm

Electrical

Current (mA):
0 - 250, 400 max

Power Consumption (W):
0 - 0.9, (0 - 2 abs. max)

Threading & Mounting

Mounting Threads:
C-Mount (Male/Female)

Regulatory Compliance

Reach 174:
Compliant

Certificate of Conformance:
View

PRODUCT DETAILS

Hirose cables (#88-941) and Lens Driver (#88-940) sold separately. Prescription data is available to model the effect an offset lens has on overall focal range.

- Continuous Focusability
- Easy System Integration with C-Mount Threads and Offset Lens Feature
- Industrial Hirose Connection with Temperature Sensing
- Optotune Focus Tunable Lenses 10mm Clear Aperture FPC Connector and Lens Drivers Also Available

Optotune Focus Tunable Lenses 10mm Clear Aperture Hirose Connector combine our Optotune Electrically-Focus Tunable Lenses with C-Mount compatible housings to ease mechanical integration into imaging systems. By applying a control current to the lens via Hirose connection, Optotune Focus Tunable Lenses 10mm Clear Aperture Hirose Connector provide an adjustment range of +8 to +10 diopters. The ability to adjust focal length is ideal for replacing multi-lens focus or zoom systems. To shift the focal range, use any 12mm plano-convex (PCX) or plano-concave (PCV) lens with an edge thickness of less than 4.7mm as an offset lens. An Optotune Focus Tunable Lenses 10mm Clear Aperture Hirose Connector with a premounted -150mm BK7 PCV lens is available for imaging applications.

Note: Hirose cables (#88-941) and Lens Driver (#88-940) sold separately. Prescription data is available to model the effect an offset lens has on overall focal range

TECHNICAL INFORMATION

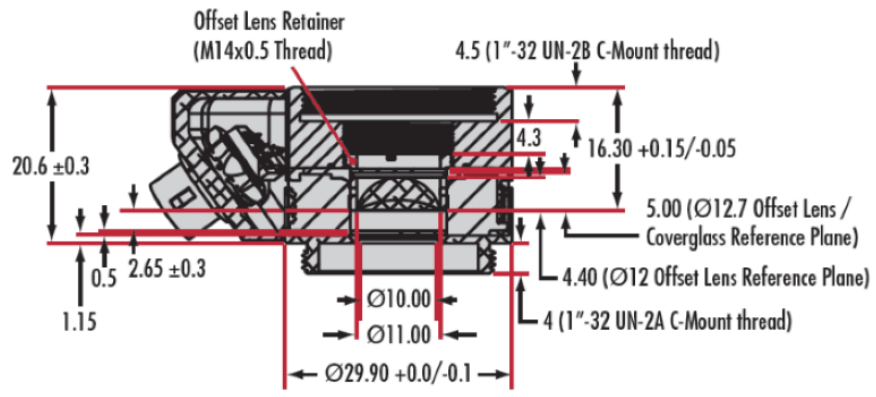
Offset Lens Retainer
(M14x0.5 Thread)
4.5 (1"-32 UN-2B C-Mount thread)
4.3
16.30 +0.15/-0.05
20.6 ±0.3
5.00 (Ø12.7 Offset Lens /
Coverglass Reference Plane)
0.5
2.65 ±0.3
4.40 (Ø12 Offset Lens Reference Plane)
1.15
Ø10.00
Ø11.00
4 (1"-32 UN-2A C-Mount thread)
Ø29.90 +0.0/-0.1

Units: mm