Bottom Adapter Plate

See More by Zaber™

#68-645

Stock **#68-645** **4 In Stock**

- 1 + **S$105.00**

ADD TO CART

Volume Pricing	
Qty 1+	**S$105.00** each
Need More?	Request Quote

Product Downloads

SPECIFICATIONS

General

Type:
Adapter Brackets & Plates

Physical & Mechanical Properties

Length (mm):

96.20

Thickness (mm):
8.00

Width (mm):
45.00

Threading & Mounting

Mounting Threads:
(4) M3 x 0.5 tapped, (2) M6 or 1/4 S.H.C.S. C'bore,
(4) M6 or 1/4 S.H.C.S. C'bore Slot

Regulatory Compliance

RoHS 2015:
Compliant

Certificate of Conformance:
View

Reach 247:
Compliant

PRODUCT DETAILS

- High Accuracy, 25mm, 50mm, 100mm, and 200mm Travel Options
- Integrated Motor and Controller
- Available with Integrated, 200 Counts per Revolution (CPR) Motor Mounted Encoder
- Easily Configurable in X-Y or X-Y-Z Configurations
- Vacuum-Compatible Options

Zaber™ High Precision Motorized Stage Systems are computer-controlled, self-contained linear stages that include a stepper motor and built-in controller. Zaber™ High Precision Motorized Stage Systems can connect directly to a computer's RS-232 port, while the included software provides an easy method for controlling travel distance or position. Additionally, the manual control potentiometer permits smooth manual movement. Encoder versions are available for all travel lengths, with 200 Counts per Revolution (CPR) rotary quadrature encoders integrated into the stepper motor. The integrated rotary encoder provides closed-loop control and slip/stall detection and recovery.

Note: A bottom adapter plate (sold separately) is required for mounting to a standard metric or English breadboard. A 24-48 VDC universal power supply, data cables for daisy chaining, and computer interface cables (USB or RS-232) are sold separately as accessories. Use Top Adapter Plate #68-644 to Mount 70mm TECHSPEC® Stages.

TECHNICAL INFORMATION
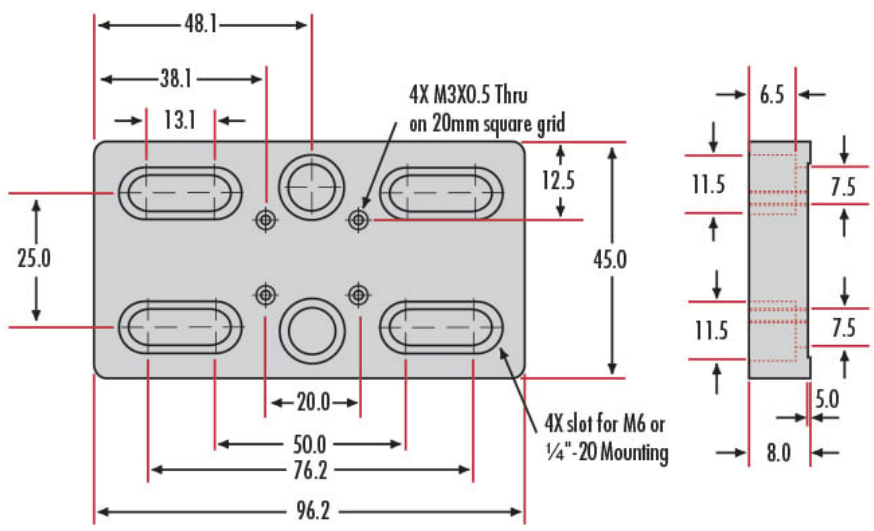
#68-645