See all 18 Products in Family

TECHSPEC® 70mm, 180mm Radius, Metric Goniometer

TECHSPEC® Goniometers

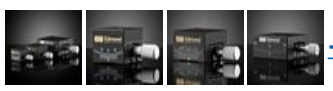
+1

Stock **#66-537** **2 In Stock**

- 1 + **S$1,141**.00

ADD TO CART

Volume Pricing	
Qty 1-2	**S$1,141.00** each
Qty 3+	**S$999.18** each
Need More?	Request Quote

Product Downloads

General

Type:
Metric

Resolution (arcmin):
5

Physical & Mechanical Properties

Type of Movement:

Goniometer

Stage Size (mm):	70 x 70
Travel (°):	±8
Construction:	Aluminium Stage
Leadscrew Pitch (mm):	0.5
Load Capacity (kg):	6
Radius R (mm):	180
Stage Size (inches):	2.75 x 2.75
Weight (kg):	0.3

Hardware & Interface Connectivity

Type of Drive:	Lead Screw

Threading & Mounting

Mounting Threads:	(9) M6 x 1, (4) M3 x 0.5, (8) M2 x 0.4

Regulatory Compliance

RoHS 2015:	Compliant
Certificate of Conformance:	View
REACH 241:	Compliant

Product Details

70mm and 125mm stages mount directly and do not require bottom adapter plates.

- Metric and English Hole Patterns Available
- Stackable for Two-Axis Rotation
- Mechanically Compatible with our **TECHSPEC® Stages**

TECHSPEC® Goniometers allow for precise angular adjustment of an object about a fixed point located above the center of the mounting surface. They provide true tip and tilt adjustment of any optical component and are often used to accurately direct lasers and align mirrors in beam steering applications. These goniometers are available in with Metric and English hole patterns. TECHSPEC® Goniometers are available in different plate sizes to accommodate a host of applications. Each size is offered in several radii of movement for easily stacking into two axis configurations. To provide motion about a common point in two different axes, mount goniometer stages with smaller radii on top of those with larger radii of the same stage size.

Each goniometer stage features precision movement along a dovetail design with a vernier scale for high-resolution measurements and movement repeatability. A locking thumbscrew allows each to be held securely in place. 30mm and 40mm goniometer stages are constructed of durable black painted brass, while 70mm goniometer stages are constructed of black anodized aluminum. **Bottom adapter plates**, sold separately, are required to mount 30mm and 40mm stages to standard breadboards; 70mm stages will mount directly.

Technical Information

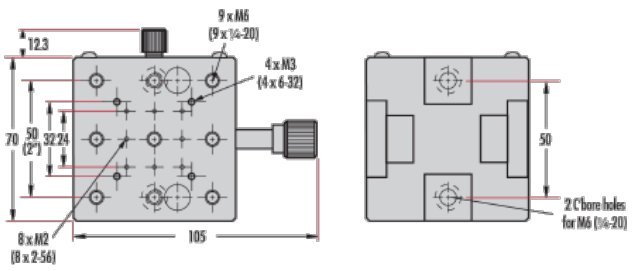

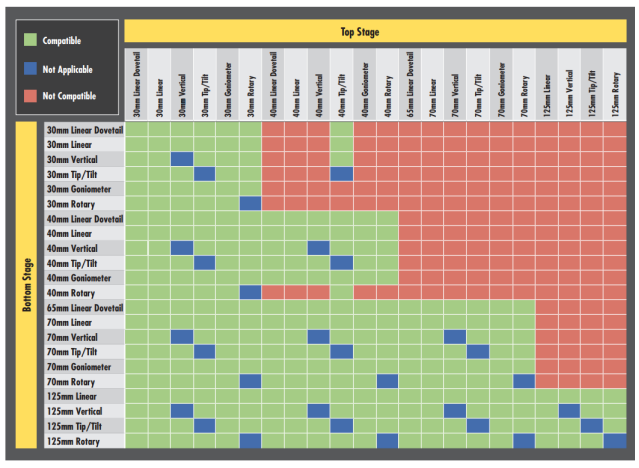

70mm Goniometers

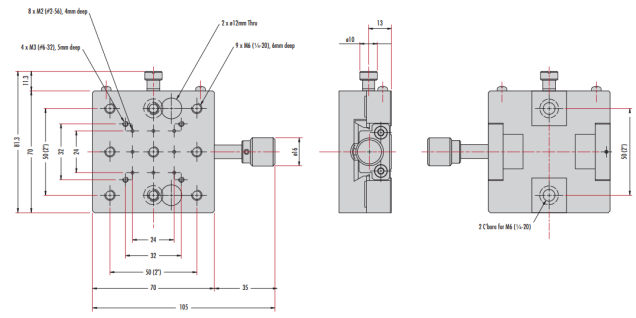

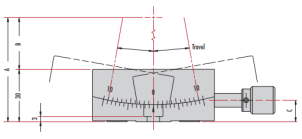

B (mm)	English Stage	Metric Stage	A (mm)	B (mm)	C (mm)
120	#66-532	#66-535	130	100	12.5
150	#66-533	#66-536	160	130	12.4
180	#66-534	#66-537	190	160	12.4

;
;