PART	PART #	MATERIAL
1	#46-065	SCHOTT RG715
2	#56-353	BLACK ANODIZED ALUMINUM

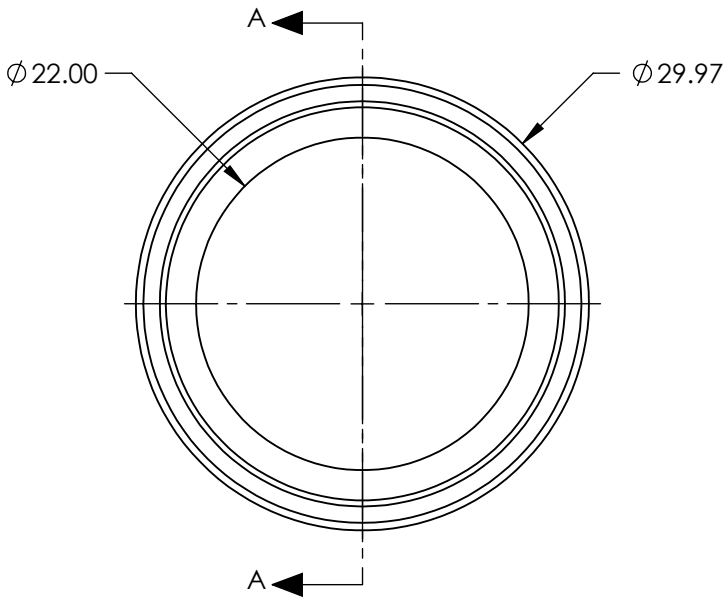

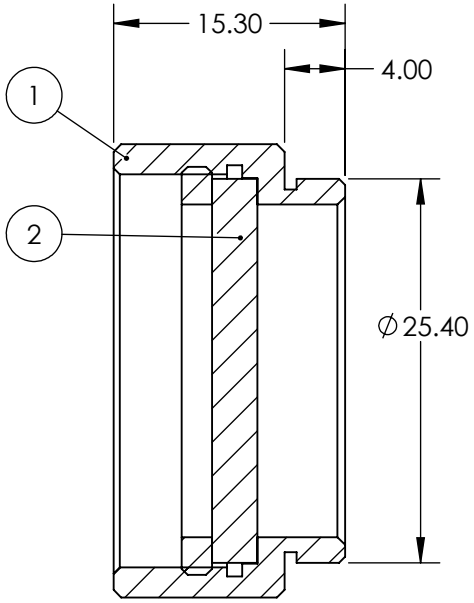

SECTION A-A

FOR INFORMATION ONLY:
DO NOT MANUFACTURE PARTS TO THIS DRAWING

SPECIFICATIONS SUBJECT TO CHANGE WITHOUT NOTICE
DIMENSIONS ARE FOR REFERENCE ONLY

SHAPE	PLANO
SPECTRAL TRANSMITTANCE (%)	96
PASSBAND LIMIT 1 (nm)	810
CUT-OFF POSITION (nm)	715±9
STOPBAND LIMIT (nm)	620
WAVELENGTH	IR

Edmund Optics®

THIRD ANGLE PROJECTION

ALL DIMS IN mm

TITLE: 22mm CA, SCHOTT RG715, C-Mount Longpass Glass Color Filter

DWG NO: 13036

SHEET 1 OF 1