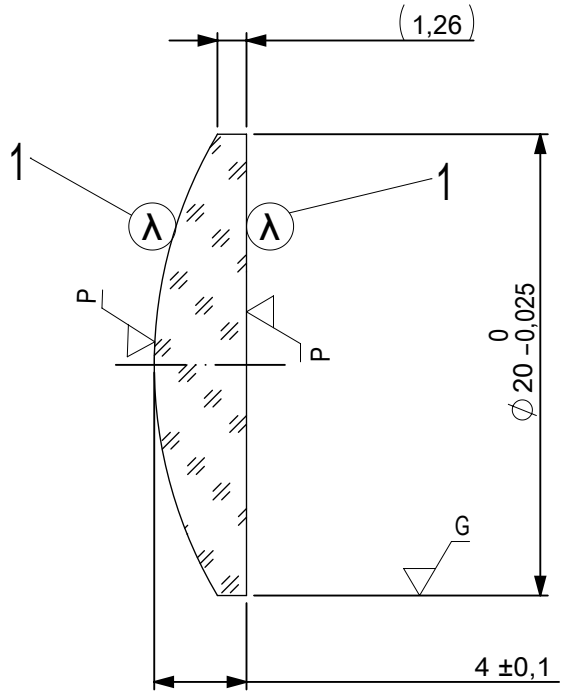

FOCAL LENGTH (EFL): 25 ±0,25

BACK FOCAL LENGTH (BFL): 22,76

1 AR COATING: YAG-BBAR
R(ABS) < 0,25% @ 532nm @ 0° AOI
R(ABS) < 0,25% @ 1064nm @ 0° AOI
R(AVG) < 1,0% FROM 500-1100nm @ 0° AOI

LEFT SURFACE		MATERIAL	RIGHT SURFACE	
R	19,62±0,02 CX	GLASS N-SF11 785/258	R	∞ PL
Øe	19		Øe	19
3/	3 (0,5) λ=632,8 nm		3/	3 (0,5) λ=632,8 nm
4/	-		4/	1,27'
5/	40 - 20 (MIL-PRF-13830B)		5/	40 - 20 (MIL-PRF-13830B)
6/	-		6/	-

PROTECTIVE CHAMFERS AS NEEDED		FIRST ANGLE PROJECTION	Edmund Optics®	
ROHS: COMPLIANT	SCALE: NONE	λ = 587,6nm		
SPECIFICATIONS SUBJECT TO CHANGE WITHOUT NOTICE. DIMENSIONS ARE FOR REFERENCE ONLY			TITLE	20,0mm Dia, x 25,0mm FL, YAG-BBAR Coated Plano-Convex Lens
FOR INFORMATION ONLY: DO NOT MANUFACTURE PARTS TO THIS DRAWING		ALL DIMS IN: mm		
INDICATIONS IN ACCORDANCE WITH ISO 10110			DWG NO 88869	SHEET SIZE A4 / SHEET 1 OF 1