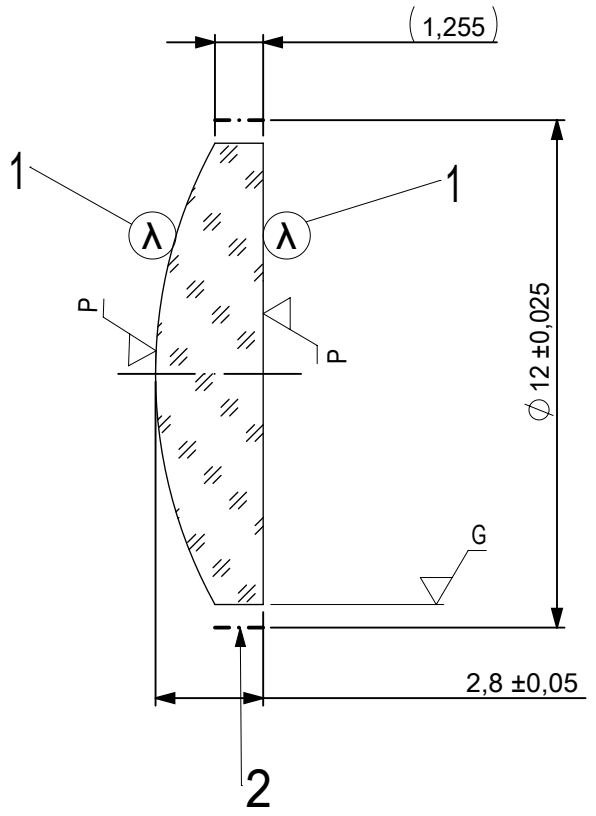

FOCAL LENGTH (EFL): 24 ±0,24

BACK FOCAL LENGTH (BFL): 22,15

1 AR COATING: VIS-EXT
R(AVG) ≤ 0,5% FROM 350-700nm @ 0° AOI

2 BLACKENED SURFACE

LEFT SURFACE		MATERIAL	RIGHT SURFACE	
R	12,42±0,012 CX	GLASS N-BK7 517/642	R	∞ PL
Øe	11		Øe	11
3/	3 (0,5) λ=632,8 nm		3/	3 (0,5) λ=632,8 nm
4/	-		4/	1,93'
5/	40 - 20 (MIL-PRF-13830B)		5/	40 - 20 (MIL-PRF-13830B)
6/	-		6/	-

PROTECTIVE CHAMFERS AS NEEDED		FIRST ANGLE PROJECTION	Edmund Optics®	
ROHS: COMPLIANT	SCALE: NONE	λ = 587,6nm		
SPECIFICATIONS SUBJECT TO CHANGE WITHOUT NOTICE. DIMENSIONS ARE FOR REFERENCE ONLY			TITLE	12,0mm Dia, x 24,0mm FL, VIS-EXT, Inked, Plano-Convex Lens
FOR INFORMATION ONLY: DO NOT MANUFACTURE PARTS TO THIS DRAWING		ALL DIMS IN: mm		
INDICATIONS IN ACCORDANCE WITH ISO 10110			DWG NO 88675INK	SHEET SIZE A4 / SHEET 1 OF 1