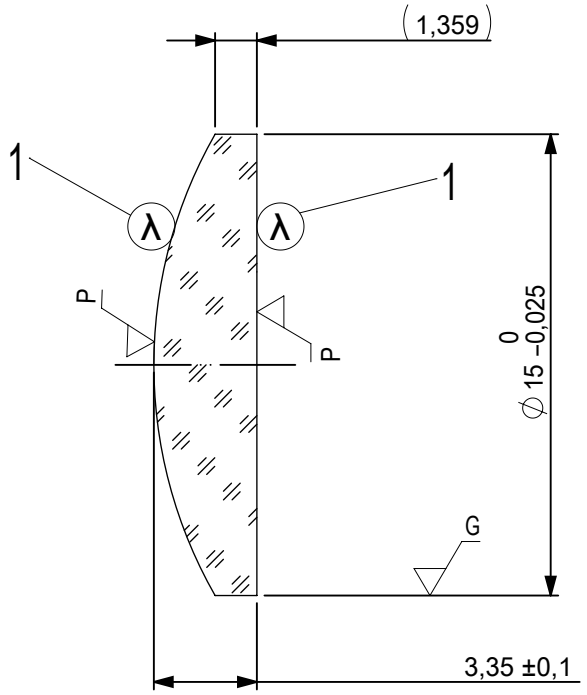

FOCAL LENGTH (EFL): 22,5 ±0,23

BACK FOCAL LENGTH (BFL): 20,5

1 AR COATING: 1064nm V-COAT
R(ABS) < 0,25% @ 1064nm @ 0° AOI

LEFT SURFACE	MATERIAL	RIGHT SURFACE
R 15,12±0,015 CX	GLASS N-SF5 673/322	R ∞ PL
Øe 14		Øe 14
3/ 3 (0,5) λ=632,8 nm		3/ 3 (0,5) λ=632,8 nm
4/ -		4/ 1,49'
5/ 40 - 20 (MIL-PRF-13830B)		5/ 40 - 20 (MIL-PRF-13830B)
6/ -		6/ -

PROTECTIVE CHAMFERS AS NEEDED		FIRST ANGLE PROJECTION	Edmund Optics®	
ROHS: COMPLIANT	SCALE: NONE	λ = 587,6nm		
SPECIFICATIONS SUBJECT TO CHANGE WITHOUT NOTICE. DIMENSIONS ARE FOR REFERENCE ONLY			TITLE	15,0mm Diameter x 22,5mm FL, 1064nm V-Coat, PCX Lens
FOR INFORMATION ONLY: DO NOT MANUFACTURE PARTS TO THIS DRAWING		ALL DIMS IN: mm		
INDICATIONS IN ACCORDANCE WITH ISO 10110			DWG NO 87620	SHEET SIZE A4 / SHEET 1 OF 1