NOTES:
1. MAIN MATERIAL: BLACK ANODIZED ALUMINUM
2. RoHS: COMPLIANT

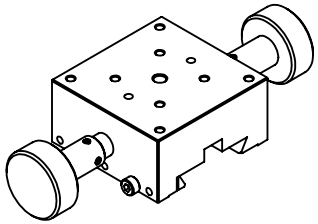

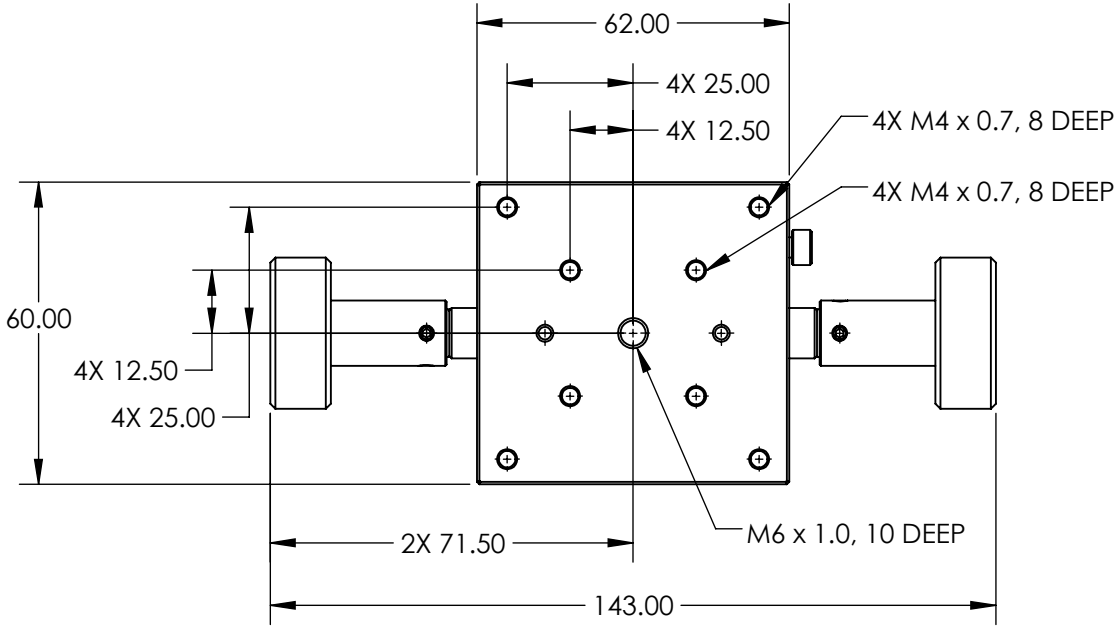


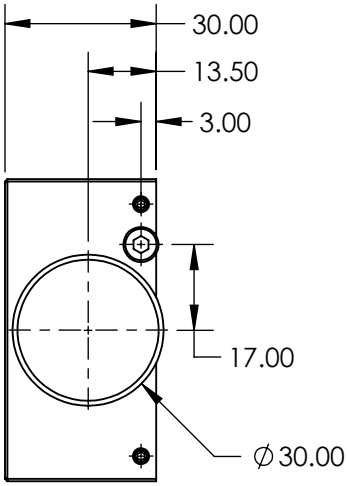


SPECIFICATIONS SUBJECT TO CHANGE WITHOUT NOTICE
DIMENSIONS ARE FOR REFERENCE ONLY

**FOR INFORMATION ONLY:**
**DO NOT MANUFACTURE PARTS TO THIS DRAWING**

Edmund Optics®

| | | | | |
|---|---|---|---|---|
| THIRD ANGLE PROJECTION | | TITLE | TWO KNOB STAGE FOR METRIC LONG TRAVEL RACK AND PINION | |
| ALL DIMS IN | mm | DWG NO | 56794 | SHEET 1 OF 1 |